550/ 750 MHz Line Extender

LE-2500C/ E

Features :

- 550 / 750 MHz amplifier
- Environmentally robust
- Easy to install and repair
- Mounting scheme: strand or pedestal installation
- Uses hybrid module for push-pull amplification
- Uses high efficiency, wide operating range (30 ~ 90 V AC) switching power supply
- All input and output ports are equipped with arresters for protection
- Plug-in designed modules, including the main power amplifier block

Descriptions :

- The LE-2500 is a bidirectional outdoor amplifier designed with compact and high efficiency switching power supply.
- Quick replaceable frame design provides great convenience to system maintenance, and an optional branch out can provide a signal drop out as a trunk line splitter or tap.

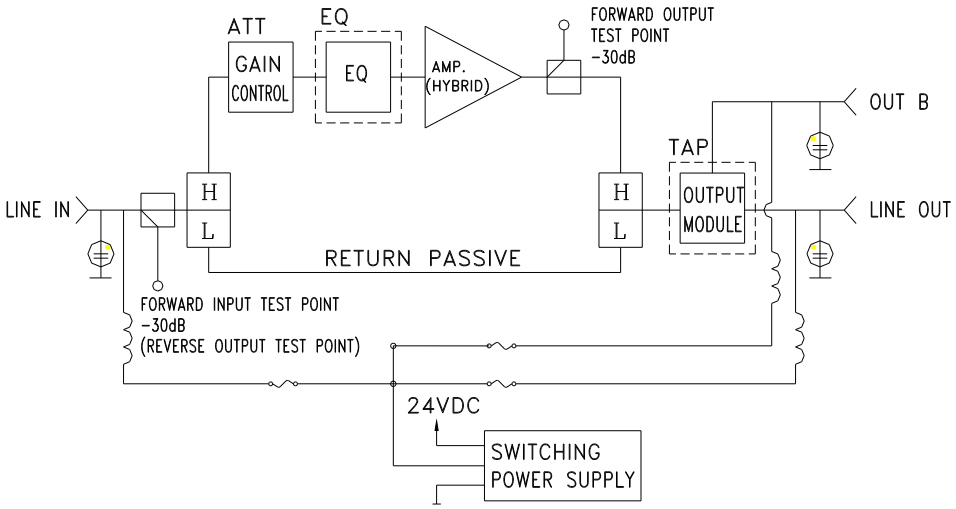

550/ 750 MHz Line Extender

Specifications:

Forward Amplifier

Model Number		LE-2500C-3032PP	LE-2500E-3032PP
Operating Frequency Range	MHz	47 ~ 550	47 ~ 750
RF Amplification Device		Push-Pull Hybrid Module	
Frequency Response	dB	32.5 ± 1.5	
Operating Gain	dB	30	
Gain Flatness	dB	± 1.5	
Noise Figure	dB	8	
Output Level (for reference)		77 NTSC chs.	110 NTSC chs.
	dBmV	98 / 106 (49 / 550 MHz)	96 / 104 (49 / 750 MHz)
Composite Second Order (CSO)	dB	-72	-61
Composite Triple Beat (CTB)	dB	-60	-53
Cross Modulation (XMOD)	dB	-60	-54
Return Loss	dB	16 typ. 12 min.	
Input Attenuation Control (Built-in)	dB	0 ~ 18, continuously adjustable	
Input Equalizer (Adjustable or Fixed value type)	dB	0 ~ 18, continuously adjustable	
Current Consumption	DC	320 mA @ 24 V DC	

Passive Return Path (Built-in)

Frequency Range	MHz	5 ~ 30	
Insertion Loss	dB	1.0 typ. 2.0 max.	
Return Loss	dB	12 typ. 10 min.	15 typ. 12 min.
Flatness	dB	± 0.5	

General Specifications

Input & Output Test Ports	dB	-30 ± 2
Power Consumption & Requirement	W	9 W @ 35 ~ 90 V DC; 30 ~ 90 V AC 47 ~ 63 Hz square or sinusoidal wave
Switching Power Supply Output Rating	DC	450 mA @ 24 V DC
Input & Output Impedance	W	75
Surge Protection	V	7,000, for 1.2 x 50 ms
Power Passing	A	7
Over Voltage Protection	V_{ac}	120
Operating Temperature	°C	-40 ~ +60
Fuse	A	2 (5 x 20 mm)
Dimensions (with connectors)	mm	230(L) x 170(W) x 85(H)
Weight	Kg	2.2
Thread Ports for Input & Output Connectors		5/8" -24 NEF Female

Specifications are subject to change without notice.

Optional Plug-in Module Selection for LE-2500C/ E

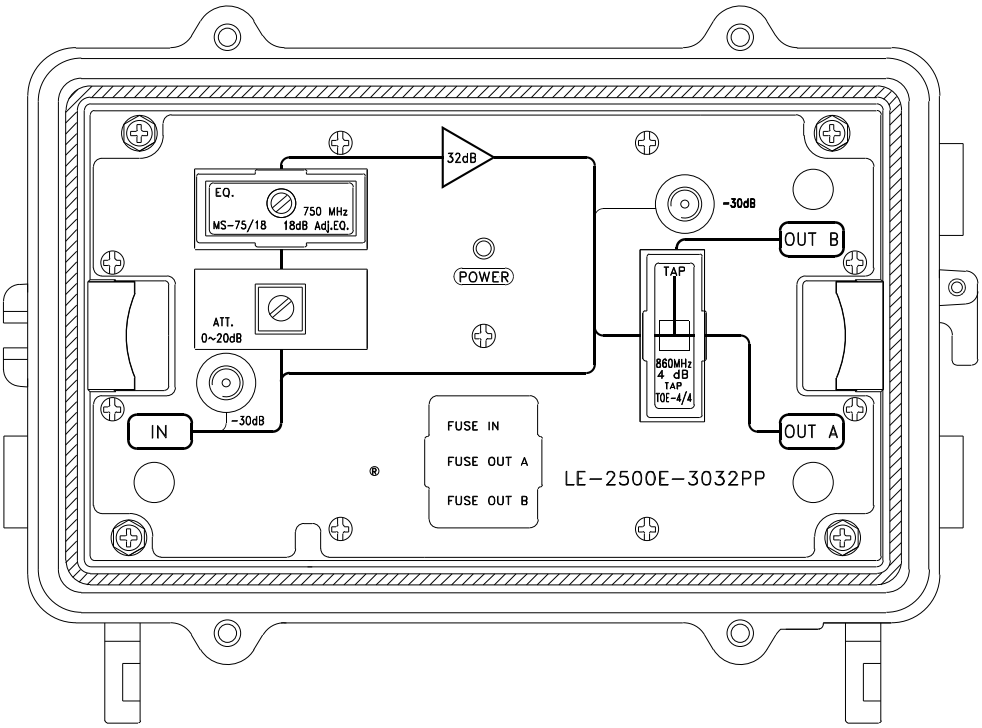

Module	Type	Module Code	Module Description	Remark
Attenuator	Built-in		0 ~ -20 dB adj.	Built-in
Input EQ.	Fixed Value (plug-in)	FA-0	0 ~ 1000 MHz, 0 dB Jumper	
		FS-55/1, 2, 3 ~ 20	550 MHz fixed value EQ.	
		FS-75/1, 2, 3 ~ 20	750 MHz fixed value EQ.	
	Adjustable (plug-in)	MS-55/18	550 MHz 0 ~ -18 dB adj. EQ.	
		MS-75/18	750 MHz 0 ~ -18 dB adj. EQ.	
Output Passive Module	(plug-in)	JP-0	0 dB Jumper	Standard
		TOE-4/4	862 MHz 4 dB splitter	
		TOE-6/2	862 MHz 6 dB tap off	
		TOE-10/1	862 MHz 10 dB tap off	
		TOE-15/1	862 MHz 15 dB tap off	

* Standard: module will be included with shipment

Please see the detailed specifications of plug-in modules from Zinwell's catalog.

Model Number System :

LE-2500E-3032PP

- Main amp. type:
  PP -- Push pull
- Line out gain: 32 -- 32 dB gain
- Return freq. range: 30 -- 5 ~ 30 MHz
- Forward frequency:
  C -- 550 MHz; E -- 750 MHz
- Product series number

ZINWELL TRANSMISSION BUSINESS UNIT
7F, 512, Yuan Shan Rd., Chung Ho City, Taipei Hsien 235, Taiwan Tel: 886-2-2225-1929 Fax: 886-2-2225-1447
e-mail: zinwell@zinwell.com.tw http://www.zinwell.com.tw ©2007 ZINWELL Corporation All rights reserved. Printed in Taiwan